Bhstg notebook

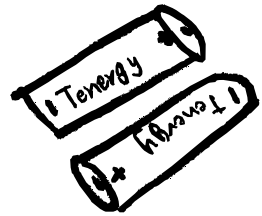

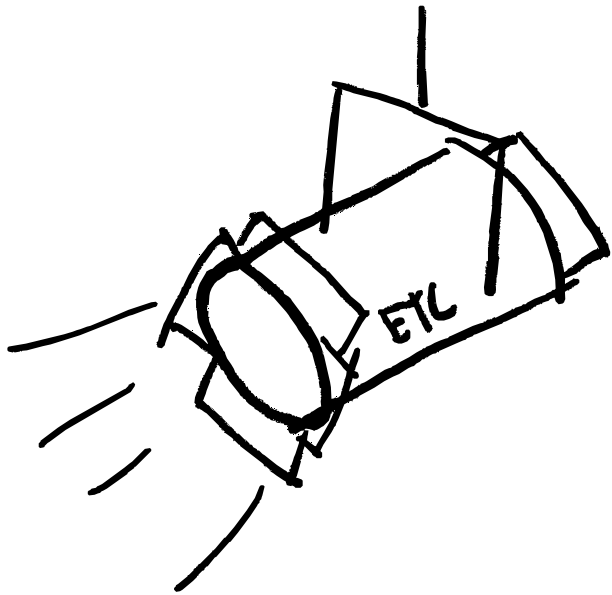

Keira mic 21 on 33 sec - mic 13
Act 1 scene 5 - Crystal mic not on + maybe Bella H.
✓ Ask Fergie how many mics he want on stage

Before tech week
- Paraphase sound board manual
- mic charging schedule
- Find intercom diagrams

Temprature testing: 10/16/24

time (s)	temprature (F)	voltage (v)	control temp (f)
Initial	74f	1.339	74f
25 min	77f	1.308	
45 min			
60 min			
total	X		X

Actor: Keira
Mic 13

time (s)	temprature (F)	voltage	control voltage (v)
Initial	74f	1.338	1.337
25 min			
45 min			
60 min			
total	X		

Actor: Symora
Mic 12

control
mic 11

Procedure: ↓ check to make sure batteries are room temp

1.) Prior to mixing actors, get initial temprature and voltage
2.) Mic actors without attaching mic to their face to limit external factors of battery draining
3.) Intermittially check mic packs with thermometer and a multimeter
4.) Calculate voltage drop between each point as well as total volate loss

Not USABLE

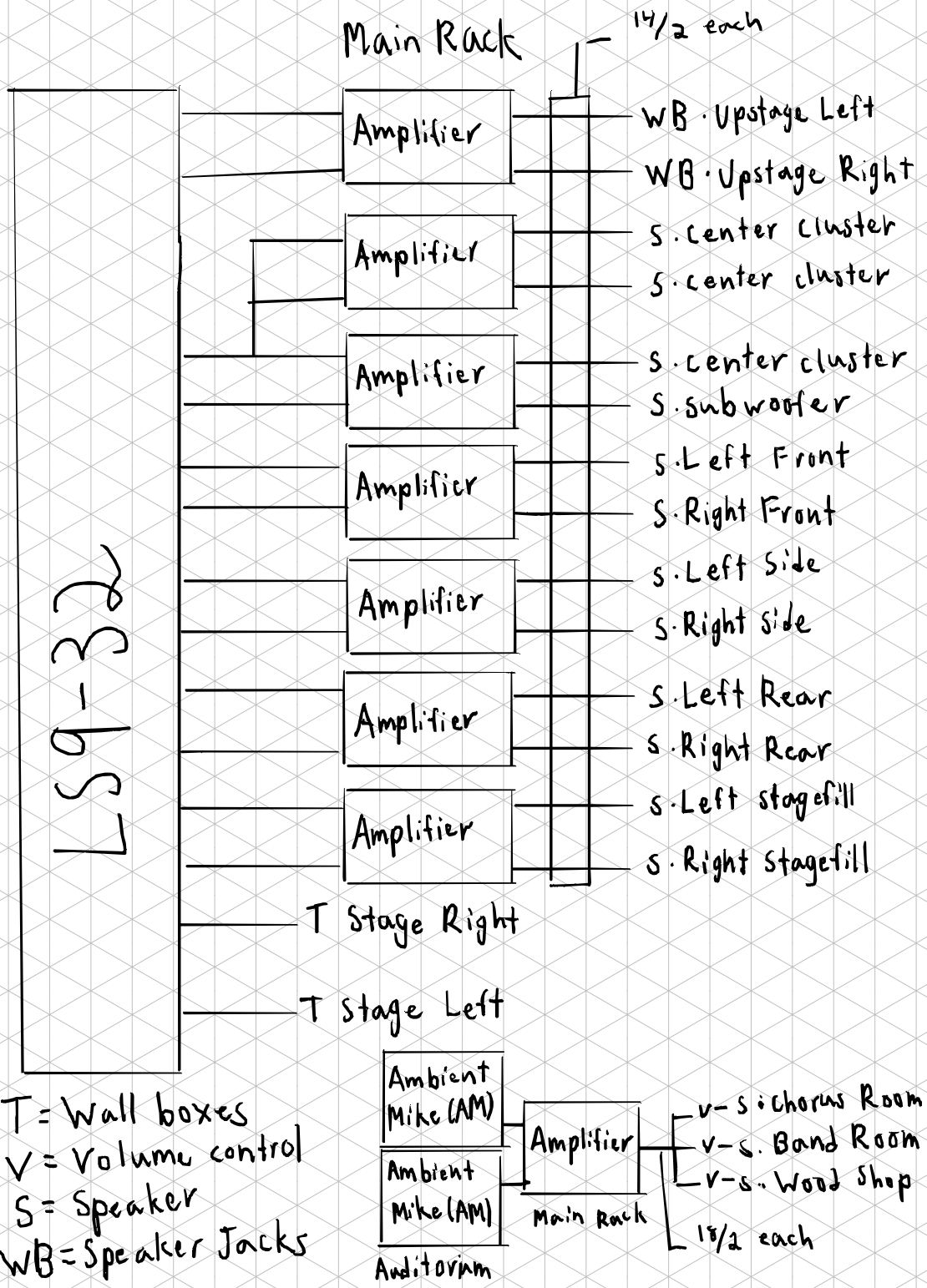
Main Rack
14/2 each
LSA-32
Amplifier
Amplifier
Amplifier
Amplifier
Amplifier
Amplifier
Amplifier
WB · Upstage Left
WB · Upstage Right
S · center cluster
S · center cluster
S · center cluster
S · subwoofer
S · Left Front
S · Right Front
S · Left Side
S · Right Side
S · Left Rear
S · Right Rear
S · Left stagefill
S · Right Stagefill
T Stage Right
T Stage Left
T = Wall boxes
V = Volume control
S = Speaker
WB = Speaker Jacks
Ambient Mike (AM)
Ambient Mike (AM)
Auditorium
Amplifier
Main Rack
V-S · Chorus Room
V-S · Band Room
V-S · Wood Shop
18/2 each

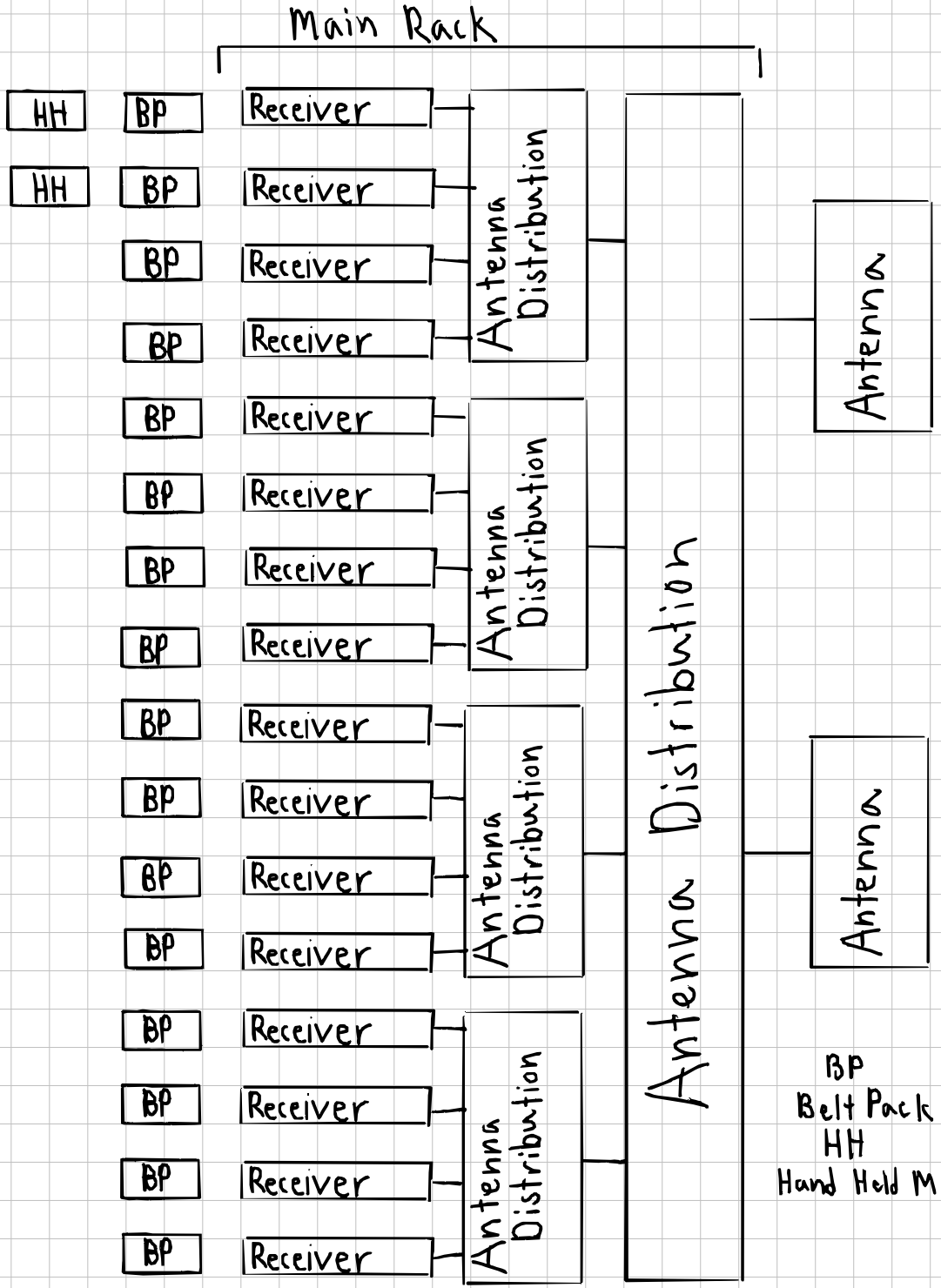
Main Rack
HH
HH
BP
Receiver
Antenna Distribution
Antenna Distribution
Antenna
Antenna
BP
Belt Pack
HH
Hand Held M

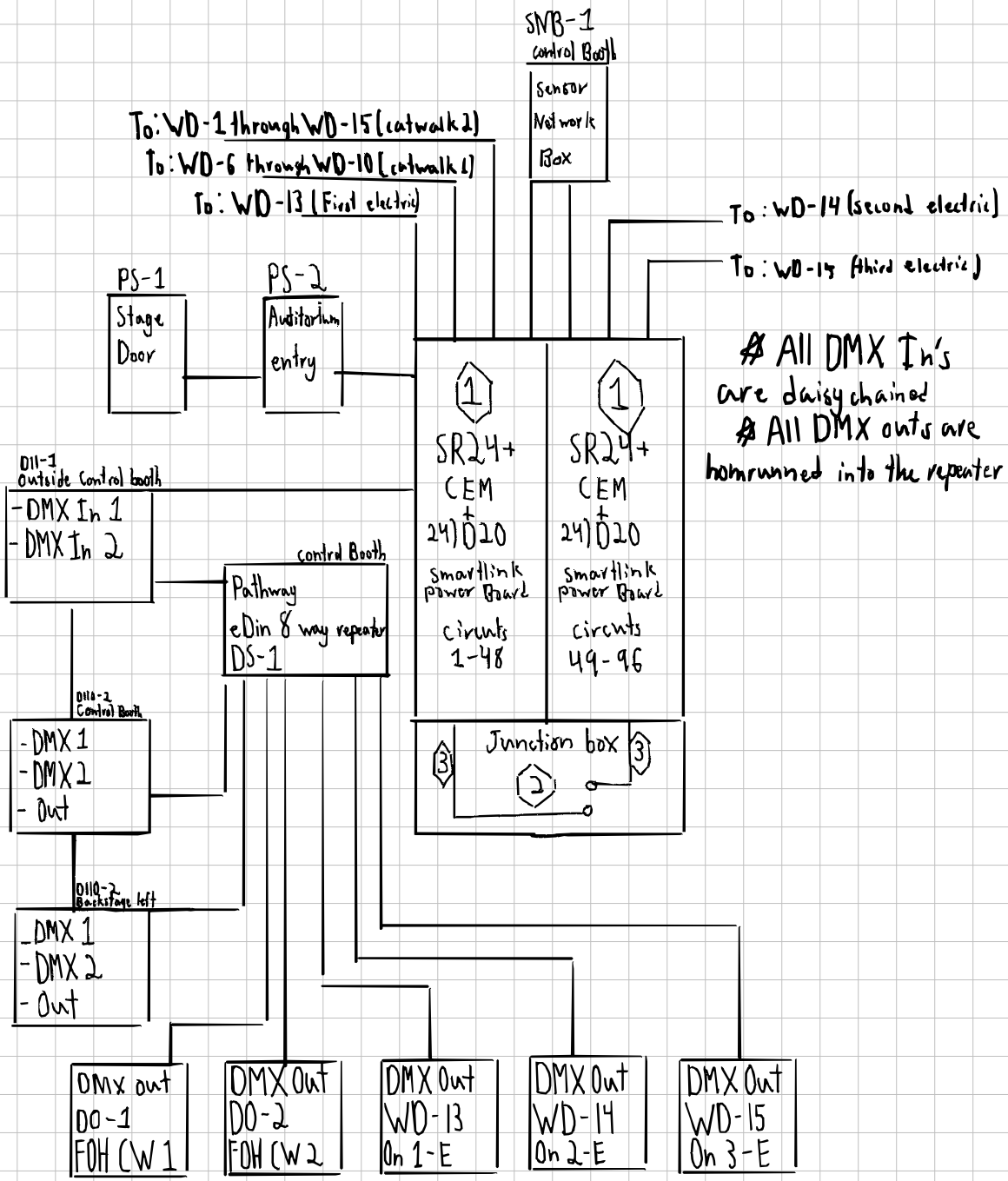
SNB-1
control Booth
Sensor Network Box
To: WD-1 through WD-15 (catwalk 2)
To: WD-6 through WD-10 (catwalk 1)
To: WD-13 (First electric)
To: WD-14 (second electric)
To: WD-15 (third electric)
PS-1
Stage Door
PS-2
Auditorium entry
1
SR24+ CEM + 24)D20 Smartlink power Board circuits 1-48
1
SR24+ CEM + 24)D20 Smartlink power Board circuits 49-96
Junction box
3
2
3
All DMX In's are daisychained
All DMX outs are homrunned into the repeater
D11-1
Outside Control booth
- DMX In 1
- DMX In 2
control Booth
Pathway eDin 8 way repeater DS-1
D11a-2
Control Booth
- DMX 1
- DMX 2
- Out
D11b-2
Backstage left
- DMX 1
- DMX 2
- Out
DMX out DO-1 FOH CW 1
DMX Out DO-2 FOH CW 2
DMX Out WD-13 On 1-E
DMX Out WD-14 On 2-E
DMX Out WD-15 On 3-E

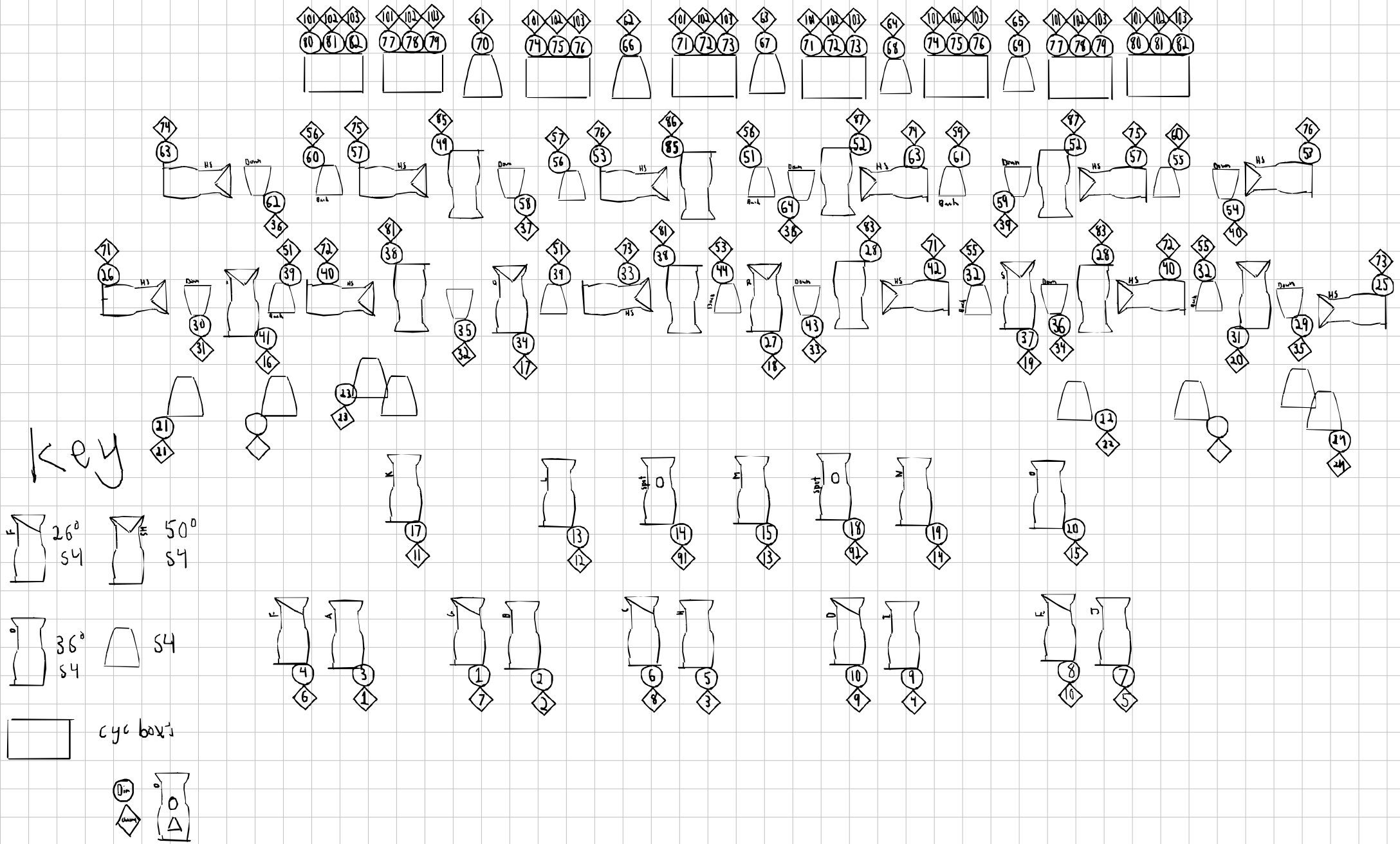
key
26°
54
50°
54
36°
54
54
cyc box's

Mic schedule

Mic #	Act 1	Act 2	48 Batteries	
Mic 3	Set 1	Set 2	1.1	1.2
Mic 4	Set 1	Set 2	2.1	2.2
Mic 5	Set 1	Set 2	3.1	3.2
Mic 6	Set 1	Set 2	4.1	4.2
Mic 7	Set 1	Set 2	5.1	5.2
Mic 8	Set 1	Set 2	6.1	6.2
Mic 9	Set 1	Set 2	7.1	7.2
Mic 10	Set 1	Set 2	8.1	8.2
Mic 11		Set 1	9.1	9.2
Mic 12		Set 1	10.1	10.2
Mic 13		Set 1	11.1	11.2
Mic 14			12.1	12.2

- Mic 11-13 alternate set one and two during tech week
- ensure standard battery level within the same pack, minimum 75%.
- Talk to teachers about starting Thursday of tech week

Mics checked: Lily - 4 Bridgette - 11 Marco -

Lily	Bridgette	Marco	
			Pre
			inter
			end

			Pre
			inter
			end

			Pre
			inter
			end

People don't make for great test subjects fml

Lily

time	Voltage

Brilgette

time	voltage

Marco

time	voltage

Batton

- metal pipe above stage, holds lighting fixtures, scenery, drapes / curtains

types

- electric, has data/power cables (DMX 512)
- Drapery, supports front curtains ie traveters
- storage, take a wild guess

Etercom (DMX512)

- DMX512 is a standard for controlled lighting and effects using the dimmers
  - the network arrangement has a single DMX512 controller, which is the master controller
    - each corresponding connected device has a DMX15 "IN" and "out", going from the out of a controller to a daisychain

DMX connector

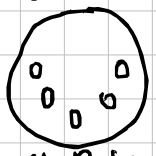

XLR5 pinout

Prohibited non-DMX connector

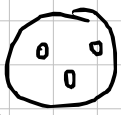

XLR3 pinout

Isabel Bonneau :)

poorly stolen from wikipedia

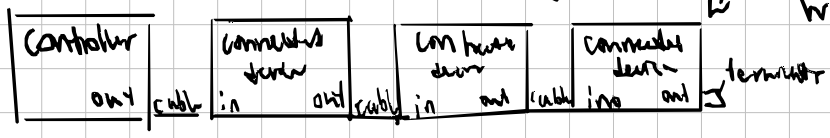

- This specification requiring a terminator at the final "Out", terminator is a stand alone male connector, though smaller systems may be able to function without them, without having them built in

- A DMX15 network is called a DMX Universe

* 3-pin XLR is also called cannon jack *

- The 3-pin XLR connector is mainly used for DMX512, for lighting control equipment, however using 3pin XLR for DMX512 is prohibited as it can damage lighting equipment

Sound shit

Layer 2

mic	1	on	1	mic	11	on	19
mic	2	on	2	mic	12	on	20
mic	3	on	3	mic	13	on	21
mic	4	on	4	mic	14	on	22
mic	5	on	5	mic	15	on	23
mic	6	on	6	mic	16	on	24
mic	7	on	7	mic	17	on	25
mic	8	on	8	mic	18	on	26
mic	9	on	17	mic	19	on	27
mic	10	on	18	mic	20	on	28

Mix status 11/16/24

1.1	1.33	1.2	1.338
2.1	1.329	2.2	1.348
3.1	1.329	3.2	1.342
4.1	1.334	4.2	1.343
5.1	1.331	5.2	1.342
6.1	1.327	6.2	1.350
7.1	1.331	7.2	
8.1	1.330	8.2	
9.1	1.380	9.2	
10.1	1.380	10.2	
11.1	1.335	11.2	
12.1	1.334	12.2	

- Both equate to 0-2 bars

Preshow

girls

Lily - 4
Bella H - 8
Bella T - 13
Sydney
Julia - 6
crystal

boys

Michael
marco
minhien
Connor
Tony - 11

Act 1

9 1.1 Minhien → 1.3 Allison → 1.4 Minhien

Intermission

- All actors mic changes
- 13 → Jay

Act 2

C	A
1	3
2	2
3	5
4	9
5	7
6	4
7	1
8	6
9	10
10	8
11	17
12	13
13	15
14	19
15	20
16	41
17	34
18	27
19	37
20	31
21	21
22	22
23	23
24	24
25	
26	
27	
28	
29	
30	
31	30
32	35
33	43
34	36

C	A
35	29
36	62
37	58
38	64
39	59
40	54
41	
42	
43	
44	
45	
46	
47	
48	
49	
50	
51	39
52	
53	44
54	
55	32
56	60
57	56
58	51
59	61
60	55
61	70
62	66
63	67
64	68
65	69
66	
67	
68	

C	A
69	
70	
71	P1 26 P2 42
72	40
73	P1 33 P2 25
74	63
75	57
76	53
77	
78	
79	
80	
81	38
82	
83	28
84	
85	P1 49 P2 50
86	
87	52
88	
89	
90	
91	14
92	18
93	
94	
95	
96	
97	
98	
99	
100	
101	P1 71 P2 74 P3 77 P4 80
102	P1 72 P2 75 P3 78 P4 81
103	P1 73 P2 76 P3 79 P4 82

3/10/25 - 3/13/25

Crown mic

↓

DMX (ideally female but we'll see)

↓

Panel

↓

LSQ-32

would explain why all inputs are full - and the cables that go to the ceiling

charlie brown auditions

- find corresponding cables

should be branded

- double velcro cables and organize accordingly

- all but two :)

double check input position on LSQ-32

should only have 20 outputs

20+ were plugged in but were labeled differently

LS9 output

Input

Layer 1
ch 17 - 24

1 channel 1 white grey
2 channel 2 white grey
3 channel 3 white grey - no label
4 channel 4 white grey - no label
5 channel 5 black
6 channel 6 black
7 channel 7 white
8 channel 8 white (green)
9 channel 9 white
10 channel 10 white
11 channel 11 white
12 channel 12 white
13 channel 13 red
14 channel 14 red
15 channel 15 red
16 3.5mm Jack - red cable separate
17 channel 17 red
18 channel 18 red
19 channel 19 yellow
20 channel 20 yellow
21, 22, 23, 24 — 3.5mm Jack go into desk — yellow labeled cables on side
25 left main brown
26 2 right main red
27 3 center main orange
29 4 sub main yellow
30 5 left side green
31 6 right side blue
32 8 right rear 33 7 left rear

Shure: BLX wireless system

BLX features and Benifits
- supports 12 simutaneous channels
- Both rack mountable and tabletop
- Operates in UHF TV band, regions with high UHF may see challenges

Receivers
- BLX 4, BLX4R, BLX88
- Quick scan, automated process for finding available channel
- BLX4 has internal antenna

Transmitters and microphones

BLX1	Body pack	BLX2	Handheld transmitter
BLX4	Receiver	BLX4R	Rack mountable reciever
BLX88	Duel channel receiver	(BLX2 + BLX4 + PG58 = BLX24/PG58)	